HSF Compliant

REV.	ECN NO.	DESCRIPTION	DRAW	CHECK	APPD.	DATE
A0		新版发行	YIN	BENDEE	BENDEE	2021.12.27
A1		变更外壳材质	YIN	BENDEE	BENDEE	2022.02.14
A2		增加尺寸标示	YIN	BENDEE	BENDEE	2022.03.11
A3		修改弹片结构	YIN	BENDEE	BENDEE	2022.03.18
A4		外壳不锈钢材质&增加点焊	YIN	BENDEE	BENDEE	2022.03.29

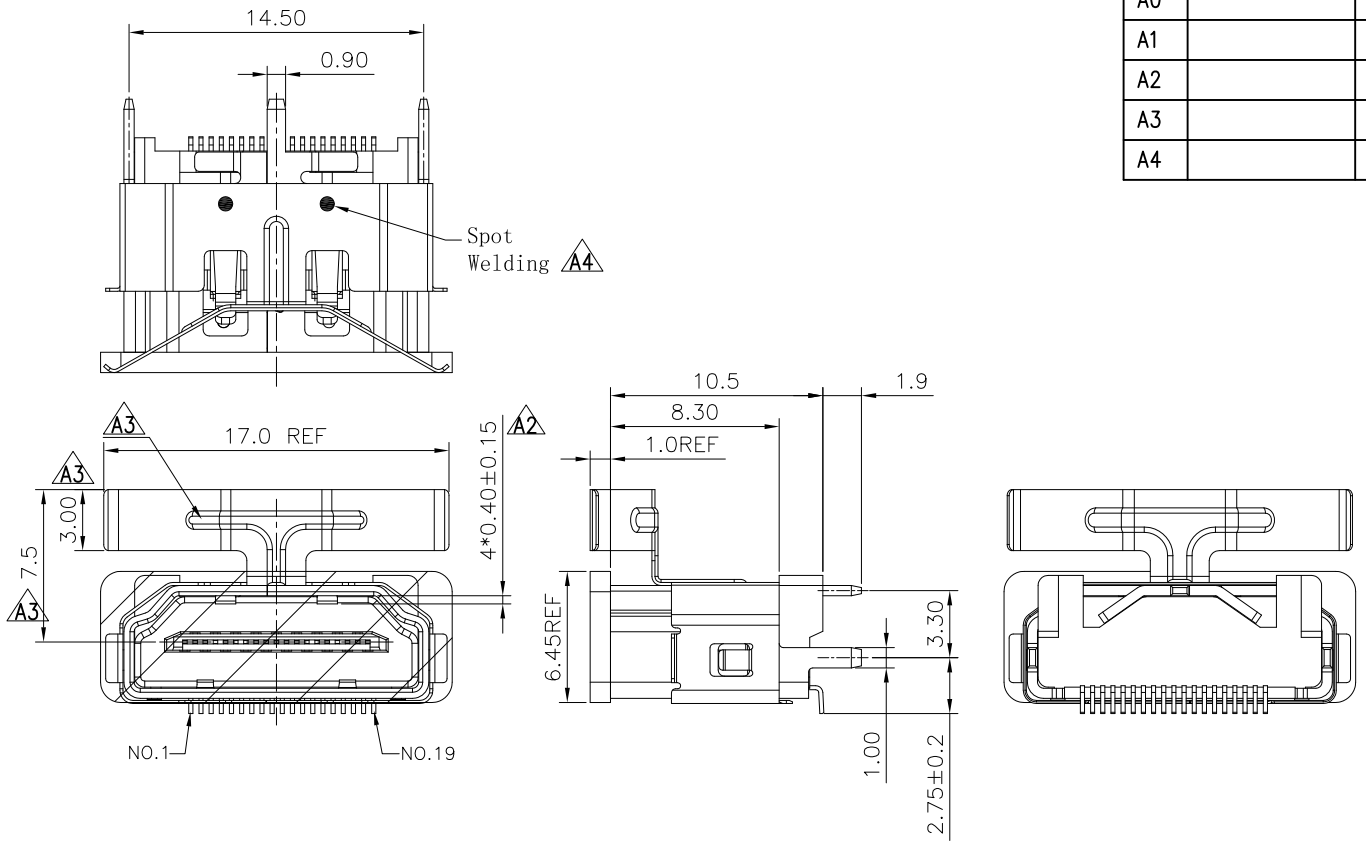

NOTES:

1.) MATERIAL:
1-1. HOUSING:LCP,UL 94V-0, COLOR:BLACK;
1-2. CONTACT: BRASS;
A4 1-3. SHELL:SUS304;
1-4. SPRING: STAINLESS STEEL;
1-5. CAP: LCP,UL 94V-0, COLOR:BLACK;

2.) FINISH:
2-1. CONTACT: Au PLATING ON CONTACT AREA, MATTE PURE Sn 80u" Min. PLATING ON SOLDERTAILS,50u" MIN. Ni UNDERPLATING OVERALL;
2-2. SHELL: Ni 50u" PLATING.
3-3. SPRING: Ni 30u" PLATING. A3

3.) SPECIFICATIONS:
3-1. VOLTAGE RATING: 40V
3-2. CURRENT RATING: 0.5A
3-3. INSULATION RESISTANCE: 100MEG.OHM MIN
3-4. CONTACT RESISTANCE: 30MILL.OHM MAX
3-5. OPERATION TEMPERATURE:-20° TO +85°
3-6. INSERT FORCE: 4.5kgf MAX
3-7. EXTRACT FORCE: 1.0~4.5kgf

料号备注

R=PACK-R0211

CH 0 F 046 M 12 R 01 W C

- 12=半金雾锡1U"
- 13=半金雾锡3U"
- 14=半金雾锡5U"
- 15=半金雾锡15U"
- 16=半金雾锡30U"
- 00=LCP黑铜壳镀镍
- 01=LCP黑不锈钢壳镀镍 A4
- R=ROHS2.0标准
- W=无卤+ROHS2.0
- B=盐雾24H
- C=盐雾48H

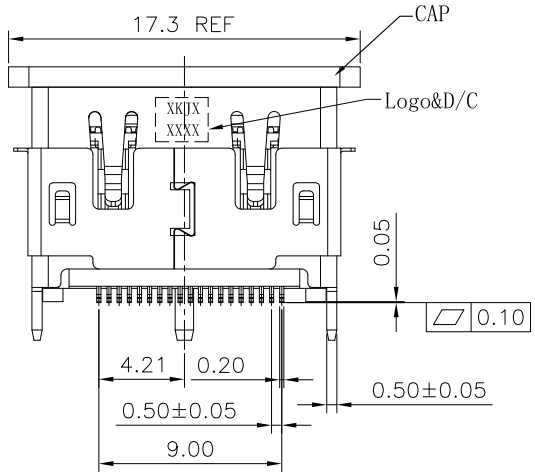

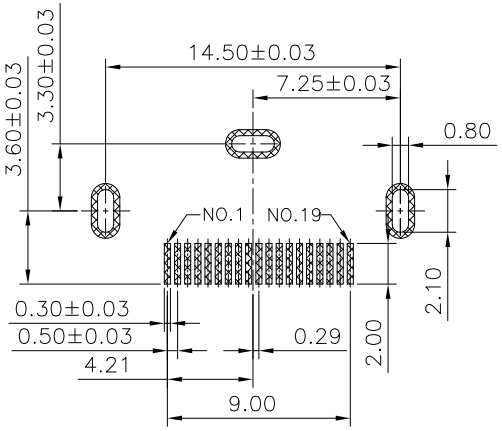

RECOMMENED P.C.B. LAYOUT(T=1.60mm)

TOLERANCES UNLESS OTHERWISE SPEC.±0.05

东莞市兴科杰鑫电子有限公司
Dong Guan XingKeJieXin Electronics Co.,Ltd

UNLESS OTHERWISE SPECIFIED TOLERANCES	APPROVAL	日期	品名规格: HDMI AF 19P 直立式SMT H=10.5 带弹片
.X +/- 0.30 (METRIC)	制图 YIN	21.12.27	
.XX +/- 0.20	审核		
.XXX +/- 0.10	核准		料号: SEE TABLE
FRACTIONS +/-	文件位置		
ANGLES +/- 2.00°	ANGLE OF PROJECTION		字张: A4 / 工程图号: DWG-HDMI19-046 / 版本: A4
DIMENSIONS (METRIC) (MM)			比例: 1 : 1 / 状态码: A / 页数: 1 OF 1